EDDY CURRENT ARRAY SURFACE PROBES

PROBE CATALOG



Eddyfi Technologies

WE ARE EDDYFI TECHNOLOGIES.

Non-destructive testing (NDT) of critical components is a vital part of integrity management and safety in such industries as nuclear, power generation, oil and gas, and aerospace. World-class engineering, nimble manufacturing, and some of the best minds in advanced eddy current testing allow Eddyfi Technologies to offer you the best performing, most reliable advanced electromagnetic hardware and software essential to you and your business.

With this standard line of surface probes, we are demonstrating a genuine commitment to the NDT industry. It offers:

Truly universal ECA solutions — Migrating from magnetic-particle (MT), penetrant (PT), and pencil-probe eddy current testing (ECT) is finally made simple. Gone are the headaches from choosing eddy current array (ECA) probes. Our probes are engineered to be easy to select and used straight out of the box... at competitive prices.

Performance — Our surface probes are designed with the highest standards, the best modeling software, the most advanced materials, and cutting-edge proprietary techniques. We use the most advanced topologies, surface-specific mechanical casings, the most advanced coil technologies which deliver the best possible signal quality and response to target defects.

Durability — All our surface ECA probes are designed for harsh environments; rugged and engineered to take on the real world.

Expertise and support — Our standard surface probes are backed by the best support in the industry. We have prime know-how and knowledge of ECA technology to help you use your probes so that they truly work for you.

Eddyfi Technologies is headquartered in beautiful Québec, Canada, at the heart of the city's advanced NDT cluster. We are the most dynamic company in the field of advanced NDT equipment — we've made it one of our missions to push the limits of electromagnetic testing to new heights, which we achieve by designing new generations of standards and specialized probes. This is how we manage to offer complete, high-end solutions for the inspection of critical components.

If, for some reason, our standard probes do not fit your specific needs, Eddyfi Technologies has all the necessary capabilities to develop custom solutions to tackle the most challenging applications.

For more information, visit www.eddyfi.com or contact us at probes@eddyfi.com.

DEMYSTIFYING THE TECHNOLOGY

Eddy current technologies take advantage of electromagnetic induction, where an alternating current flowing through a wire coil — generally copper — generates an oscillating magnetic field. When this magnetic field nears another electrically conductive material, a circular flow of electrons appears in the material, which is known as an eddy current. An eddy current also generates a magnetic field that interacts with the coil and its own magnetic field. Defects such as cracks in the electrically conductive material disrupt the flow of eddy current and its magnetic field, modifying the electrical impedance of the coil, making it possible to identify and characterize the defects.

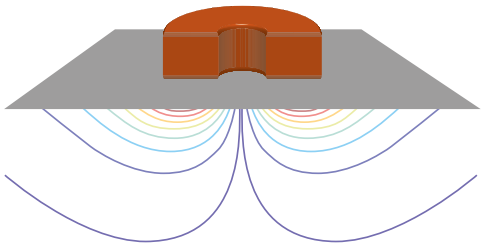

EDDY CURRENT TESTING

Usually referred to as ECT, it is the best non-ferrous component (e.g., stainless steel weld) inspection method. ECT makes it possible to reliably detect corrosion and surface cracking, for example. Such defects cause variations in the phase and magnitude of eddy currents generated by a transmitter coil, which are monitored by a receiver coil or by measuring the variations in the current flowing through the transmitter. This is the core of standard, single-element ECT.

EDDY CURRENT ARRAY

ECA technology uses many individual coils, grouped in one probe. The coils are excited sequentially to eliminate interference from mutual inductance (i.e., channel multiplexing). To optimize performance, ECA probes can be flexible or shaped to match specific geometries for simpler, one-pass inspections. Furthermore, probe data can be encoded. It is transmitted directly to software for graphical display (C-scan), record keeping, and reporting.

Because of the shorter inspection times, better detection, and complete inspection records, ECA probes can replace a number of traditional NDT inspection methods like MT, PT, and single-element ECT (above).

Single-coil ECT

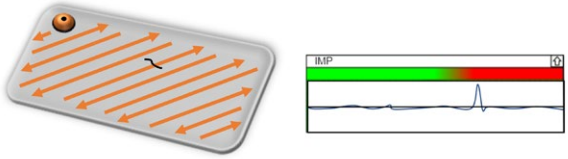

Multi-coil ECT



CHANNEL MULTIPLEXING

Channel multiplexing in ECA probes is achieved when groups of coils are excited at timed intervals to eliminate interference from mutual inductance, allowing them to work together in scanning wider inspection areas than conventional ECT probes. Coils are considered multiplexed when the active time interval of one or a combination of coils expires and the active time interval of other coils starts. Channel multiplexing has several advantages:

- Minimizes crosstalk between adjacent coils
- Increases the channel resolution and coil sensitivity
- Improves the signal-to-noise ratio of the probe

Channel multiplexing is achieved with the help of a device that connects and acquires signals from several groups of coils through a single instrument input. This device is intuitively called a multiplexer (MUX) and essentially works like a high-speed switch that successively connects each signal to the test instrument. Eddyfi-line Ignite®, Ectane®, and Reddy® test instruments are equipped with SmartMUX™ — an integrated, universal, programmable MUX — which takes care of channel multiplexing.

ECA TOPOLOGIES

Topologies refers to how coils are organized inside a probe and their activation patterns used in combination to create at least one eddy current channel. We offer a variety of advanced topologies — some of the most commonly used in ECA probes are presented here. Other topologies can be used in custom probes. See page 26 for details.

IMPEDANCE

This topology can detect discontinuities oriented in any direction, especially where there is very little liftoff variation. The impedance topology can be separated into two modes:

Absolute — One coil is excited to generate eddy currents and to sense variations in their field.

Differential — Two coils are excited to generate eddy currents. When the two coils are over an area free from defects, there is no differential signal between the coils, as they are both inspecting identical material. One coil over a defect while the other is over good material generates a differential signal, making it possible to characterize the defect.

All our impedance probes support both operating modes.

TRANSMIT—RECEIVE

The transmit-receive topology is generally comprised of two rows of coils and is directional, creating axial and/or transverse channels. Axial (or longitudinal) channels detect defects perpendicular to the array of coils, while transverse (or circumferential) channels detect those parallel to it.

Long, single driver — This topology uses a relatively conventional method of generating eddy current signals: a single coil is the transmitter (T). This single-driver topology is the best to detect large and/or subsurface defects, and offers a better tolerance to liftoff than the double-driver topology.

Short, double driver — This topology uses two coils, excited simultaneously, acting as one large transmitter. The large area (ergo higher resolution) offers — over the single-driver topology — a better response and sensitivity to small defects. It has, however, fewer channels than the single-driver topology for the same number of coils.

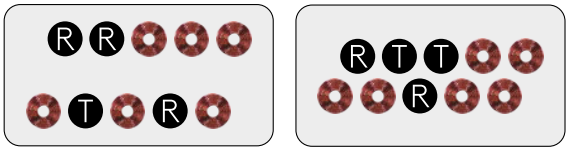

Long, single driver Short, double driver

TANGENTIAL ECA (TECA™)

This topology incorporates tangential coils that yield a very specific eddy current signal for surface-breaking cracks in carbon steel. As illustrated, the liftoff signal is almost horizontal and crack-like indications are approximately 90° relative to it.

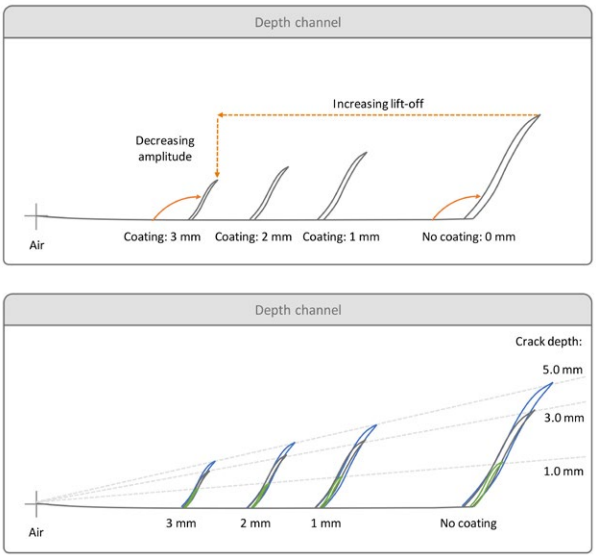

THE RIGHT SURFACE PROBE FOR THE JOB

SEMI-FLEXIBLE PROBES

These easily bend to perform axial scans on convex or concave geometries with height variations along a single axis (such as pipes and floor plates). They offer several frequency brackets, number of coils, and casing sizes (small, medium, and large).

PADDED PROBES

Going one step further, padded probes can adapt to all geometry variations, in every direction, which makes them perfect for weld beads, transitions, and heat-affected zones. The unique, proprietary design makes it possible to detect surface cracks in welds with little surface preparation. The probe's membrane is extra-tough to better withstand friction. Like other Eddyfi surface probes, padded probes offer many frequency brackets, number of coils, and casing sizes (small and medium).

FLEXIBLE PROBES

These probes are specifically designed to fit complex geometries, making them ideal for one-pass examination of small pipes, nozzles, turbine blades, wheels, grooves, slots, gaps, and any other tight or strongly curved surface.

The printed flexible (P-Flex) probes offer maximum flexibility thanks to their array of high-frequency printed coils. They can be bent in any orientation to fit almost any geometry with the smallest radii of curvature. They are available in three sizes — small, medium, large — and can be detached from their cable adapter to facilitate their replacement.

The I-Flex™ probes, although less flexible, offer a unique design with three built-in topologies, making them the most versatile tool for the inspection of any conductive material. They are also available in three sizes and with various frequency ranges, including low frequencies for an increased material penetration.

SHARCK™ PROBES

Sharck probes combine the benefits of rigid and semi-flexible probes. Their spring-loaded fingers adapt to the geometry of weld crowns, making it possible to quickly scan the weld cap, the toe area, and the heat affected zone in a single pass. This design is mostly used in combination with the patented TECA™ technology to inspect carbon steel welds.

QUICK LINK CONNECTOR

With the Ignite instrument, you can now benefit from our QuickLink technology. This allows you to save setup files and documents directly inside the probe and access them via Magnifi. This ensures that each probe travels with its setup file and associated procedure and is ready to be used by anyone on any instrument. Probes with QuickLink are identified by the letter Q in the probe number.

PROBE NUMBERING

SHARCK (Technology) - BW053 (Weld type; Coverage) - G2 (Generation) - E (Compatible instrument) - N05S (Cable length; Cable type; Cable exit position)

GEAR (Technology) - M20_30 (Module range) - 076 (Coverage) - N03T (Cable length; Cable type; Cable exit position)

ECA (Technology) - SFD (Body; Topology) - 056 (Coverage) - 250 (Central frequency) - 032 (Coil number) - N03S (Cable length; Cable type; Cable exit position)

TYPE

- ECA
- SHARCK
- GEAR
- SPYNE

BODY TYPE

- SF: semi-flexible
- PD: padded
- TF: T-Flex
- IF: I-Flex

TOPOLOGY TYPE

- A: impedance
- C: long, single driver
- D: short, double driver
- G: multitopology

APPLICATION TYPE

- BW: butt weld
- FW: fillet weld
- HR: high resolution

COMPATIBLE INSTRUMENT

- E: Ectane
- R: Reddy
- Q: QuickLink (Ignite)

COVERAGE

This is the width covered by the probe's active surface, in millimetres.

CENTRAL FREQUENCY

- LXX: frequency in hertz, divided by 10 (e.g., 500 Hz = L50)
- XXX: frequency in kilohertz (e.g., 10 kHz = 010)
- XXM: frequency in megahertz (e.g., 2 MHz = 02M)



SURFACE PROBE OFFERING — QUICK LOOKUP

The table below was designed to help you quickly find the probe you are looking for.

GEOMETRY	BODY	FAR-SURFACE CORROSION	SUBSURFACE DEFECTS (CRACKS, VOIDS, POROSITY)	SURFACE-BREAKING DEFECTS	MINIMUM CHANNEL REQUIREMENT	COVERAGE	CASING	PROBE NUMBER	PAGE
Carbon Steel	Butt weld Sharck			●	64	53 mm (2.1 in)	Spring-loaded fingers	SHARCK-BW053-G2-C	
	Fillet weld Sharck			●	32	28 mm (1.1 in)		SHARCK-FW028-G2-C	page 8
	Pencil Sharck			●	32	7 mm (0.3 in)	Straight pencil	SHARCK-PEN-ST-G2-C	page 9
				●	32	7 mm (0.3 in)	Right-angle pencil	SHARCK-PEN-RA-G2-C	page 9
				●	32	7 mm (0.3 in)	Toothbrush	SHARCK-PEN-TB-G2-C	page 10
	High-resolution Sharck			●	64	74 mm (2.9 in)	Spring-loaded fingers	SHARCK-HR-10PLUS-060-N05R	page 11
				●	64	41 mm (1.6 in)		SHARCK-HR-6PLUS-033-N05R	page 12
				●	32	3 mm (0.1 in)	Straight pencil	SHARCK-HR-PEN-ST-N05TR	page 13
Complex	I-Flex	●	●		32	128 mm (5.0 in)	Extra-large	ECA-IFC-128-005-033-N03SA	page 19
			●	●	32 or 64	79 mm (3.1 in)	Large	ECA-IFG-079-250-048-N03S	page 19
		●	●	●	32 or 64			ECA-IFG-079-050-048-N03S	page 20
			●	●	32 or 64	56 mm (2.2 in)	Medium	ECA-IFG-056-250-048-N03S	page 20
		●	●	●	32 or 64			ECA-IFG-056-050-048-N03S	page 21
				●	32 or 64	34 mm (1.3 in)	Small	ECA-IFG-034-500-048-N03S	page 21
	T-Flex			●	64	70 mm (2.8 in)	Medium	ECA-TFC-070-300-044-N03S	page 23
			●	●	64			ECA-TFC-070-045-044-N03S	page 23
	Printed flexible (P-Flex)			●	64	34 mm	Requires adapter ECA-PFLEX-CBL-D-032-N03S	ECA-PFLEX-D-034-HF-032	page 17
				●	64	56 mm		ECA-PFLEX-D-056-HF-032	page 17
				●	64	79 mm	Requires adapter ECA-PFLEX-CBL-C-032-N03S	ECA-PFLEX-C-079-HF-032	page 18
Gear teeth	Gear			●	128	112 mm (4.4 in)	Large	GEAR-M30_42-112-N03T	page 24
				●	64	76 mm (3.0 in)	Medium	GEAR-M20_30-076-N03T	page 24
				●	64	50 mm (2.0 in)	Small	GEAR-M13_20-050-N03T	page 25
Curved surfaces	Semi-flexible	●	●		32	128 mm (5.0 in)	Large — Minimum OD 0.9 m (36 in)	ECA-SFC-128-005-033-N03S	page 26
		●	●		32	64 mm (2.5 in)	Medium — Minimum OD 0.4 m (16 in)	ECA-SFC-064-005-017-N03S	page 26
				●	64	58 mm (2.3 in)		ECA-SFC-058-250-032-N03S	page 27
				●	64	56 mm (2.2 in)		ECA-SFD-056-250-032-N03S	page 27
				●	128	71 mm (2.8 in)		ECA-SFC-071-500-064-N03S	page 28
				●	128	70 mm (2.8 in)		ECA-SFD-070-500-064-N03S	page 28
				●	64	35 mm (1.4 in)	Small — Minimum OD 0.2 m (8 in)	ECA-SFC-035-500-032-N03S	page 29
				●	64	34 mm (1.3 in)		ECA-SFD-034-500-032-N03S	page 29
Welds and smooth surfaces	Padded			●	64	58 mm (2.3 in)	Medium	ECA-PDC-058-250-032-N03S	page 30
				●	64	56 mm (2.2 in)		ECA-PDD-056-250-032-N03S	page 30
				●	128	55 mm (2.2 in)		ECA-PDC-055-500-050-N03S	page 31
				●	128	54 mm (2.1 in)		ECA-PDD-054-500-050-N03S	page 31
				●	64	35 mm (1.4 in)	Small	ECA-PDC-035-500-032-N03S	page 32
				●	64	34 mm (1.3 in)		ECA-PDD-034-500-032-N03S	page 32
Pipeline	Spyne			●	128	202 mm (8.0 in)	ECA-SPYNETOOL-6PLUS	ECA-SPYNE-C-202-250-086	page 15
				●	128	200 mm (7.9 in)		ECA-SPYNE-D-200-250-066	page 15
		●	●	●	128	203 mm (9.0 in)		ECA-SPYNE-C-203-025-066	page 16

CARBON STEEL — SHARCK PROBES

The patented Sharck probe is specifically designed for cracking in carbon steel using tangential eddy current array (TECA) technology. These probes are capable of positioning cracks, measuring their length, and sizing them as deep as 7 mm (0.28 in). This can be achieved without removing paint or protective coatings, unlike more conventional techniques.

SHARCK-BW053-G2-C-R-N05S

Designed to scan the weld cap, toe area, and heat affected zone of carbon steel butt welds in a single pass.

Body	Butt weld Sharck
Topology	TECA
Finger material	Ceramic
Coverage	53 mm (2.90 in)
Fingers	22 (11 × 2 rows)
Minimum channel requirement	64
Frequency	Tuned, fixed at 20 kHx and 80 kHz
Encoder (20.53 counts/min)	E: Ectane R: Reddy Q: QuickLink (Ignite)
Cable	5 m (16.4 ft) to 30 m (98 ft)
Maximum surface temperature	100 °C (212 °F)
Minimum pipe diameter for circumferential weld scan	25.4 cm (10 in)
Minimum pipe diameter for axial weld scan	40.6 cm (16 in)

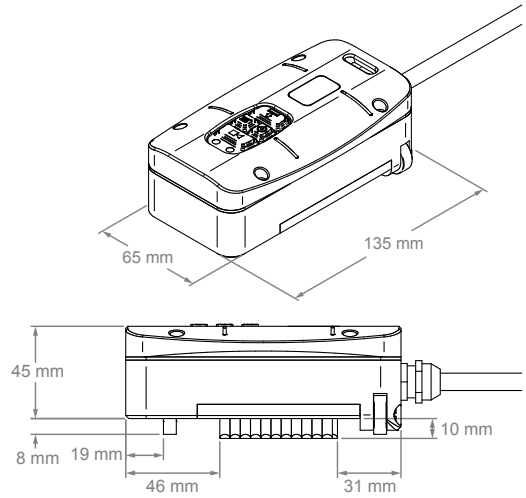

SHARCK-FW028-G2-C-R-N05S

Designed for carbon steel fillet weld crack detection and depth sizing.

Body	Fillet weld Sharck
Topology	TECA
Finger material	Ceramic
Coverage	28 mm (1.10 in)
Fingers	12 (6 on cap, 6 on HAZ)
Minimum channel requirement	32
Frequency	Tuned, fixed at 20 kHx and 80 kHz
Cable	5 m (16.4 ft)
Connector	E: Ectane R: Reddy Q: QuickLink (Ignite)
Maximum surface temperature	100 °C (212 °F)
Fillet range	12.4–23.0 mm (0.50–0.91 in)
Minimum weld curvature radius	31.8 cm (15 in) concave and convex

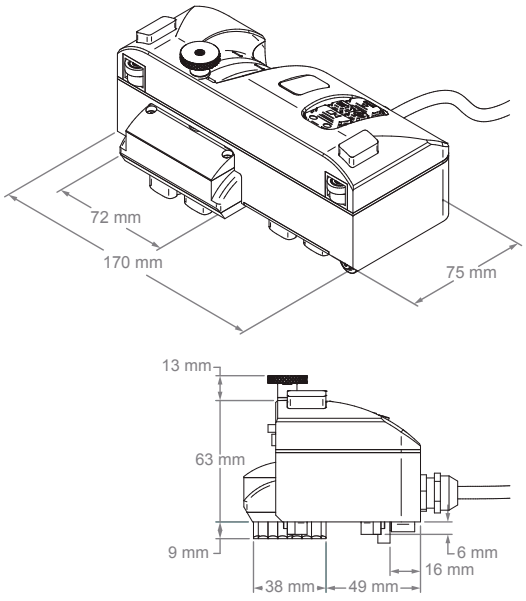

SHARCK-PEN-ST-G2-C-N05TR or SHARCK-PEN-ST-G2-C-N05TE

Straight Sharck pencil probe.

Body	Pencil Sharck
Casing	Straight
Coverage	Approximately 7 mm (0.3 in) at –6 dB
Fingers	1
Minimum channel requirement	32
Frequency	Tuned, fixed at 20 kHz and 80 kHz
Cable	5 m (16.4 ft)
Connector	E: Ectane R: Reddy
Maximum surface temperature	100 °C (212 °F)

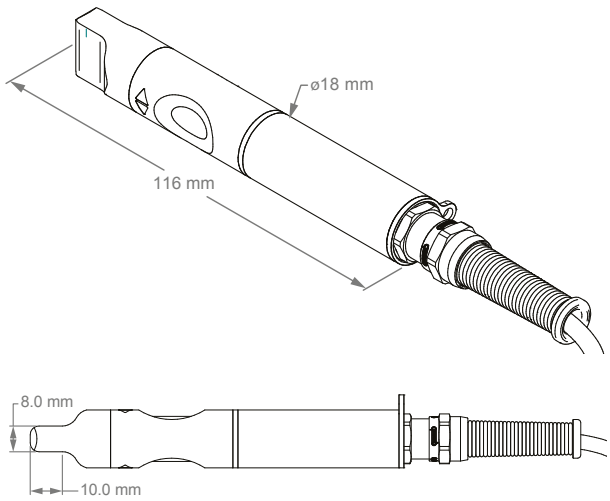

SHARCK-PEN-RA-G2-C-N05TR or SHARCK-PEN-ST-G2-C-N05TE

90° Sharck pencil probe.

Body	Pencil Sharck
Casing	Right angle
Coverage	Approximately 7 mm (0.3 in) at –6 dB
Fingers	1
Minimum channel requirement	32
Frequency	Tuned, fixed at 20 kHz and 80 kHz
Cable	Standard, 5 m (16.4 ft)
Connector	E: Ectane R: Reddy
Maximum surface temperature	100 °C (212 °F)

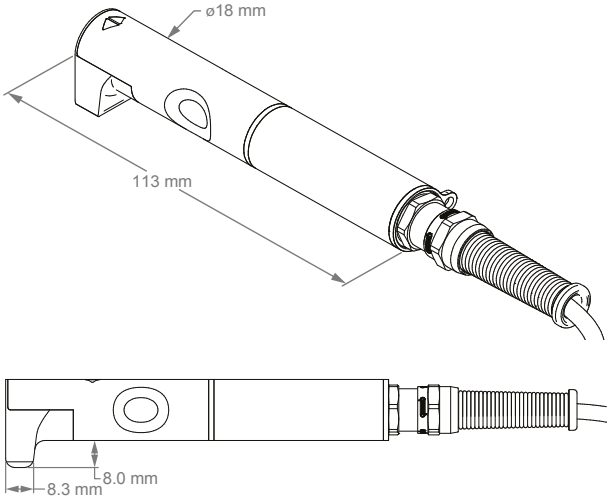

SHARCK-PEN-TB-G2-C-N05TR or SHARCK-PEN-TB-G2-C-N05TE

Toothbrush pencil probe.

Body	Pencil Sharck
Casing	Toothbrush
Coverage	Approximately 7 mm (0.3 in) at –6 dB
Fingers	1
Minimum channel requirement	32
Frequency	Tuned, fixed at 20 kHz and 80 kHz
Cable	5 m (16.4 ft)
Connector	E: Ectane R: Reddy
Maximum surface temperature	100 °C (212 °F)

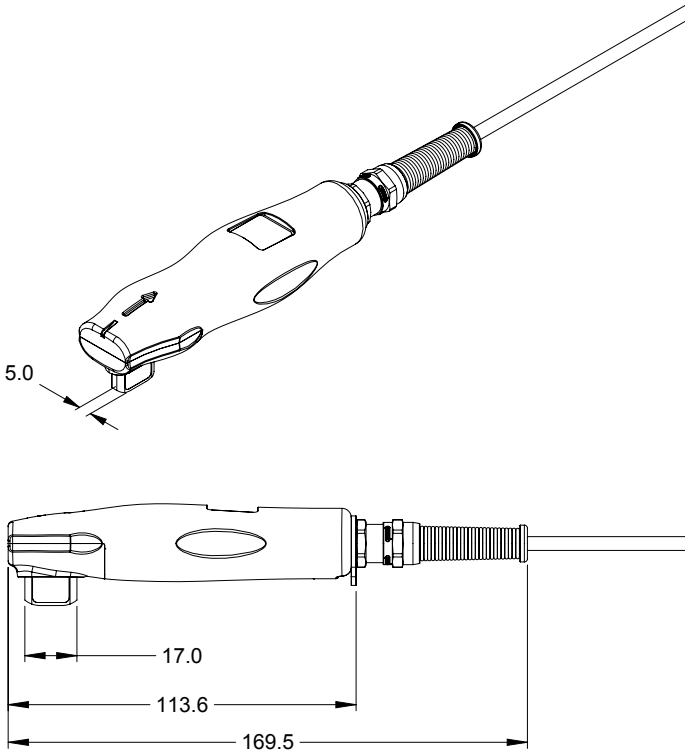

PERFORMANCE

SPECIFICATION	VALUE	NOTE
Detectable defect range (length × depth)	2 × 0.5 mm (0.08 × 0.02 in)	Results may vary according to crack location, liftoff, etc.
Maximum measurable crack depth	7 mm (0.28 in)	Typical, with good accuracy, but can detect deeper cracks
Sizing accuracy (length, depth)	±2 mm (0.08 in), ±10–20 %	Typical when using 0.5 mm (0.02 in) scan resolution and depending on weld conditions
Scan speed	Up to 200 mm/s (7.9 in/s)	With full data recording
Liftoff tolerance	Up to 3 mm (0.12 in)	Non-conductive coatings and paints, with monitoring and auto-correction

SHARCK HR PROBES

Sharck HR is the high-resolution version of the Sharck technology, optimized for the depth sizing of external stress corrosion cracking (SCC) in carbon steel pipelines. SCC is known to develop in dense colonies, requiring high-resolution sensors and advanced data processing to enable the accurate depth measurement of the cracks.

SHARCK-HR-10PLUS-060-N05R

The high-resolution Sharck probe, combined with a Reddy® portable instrument, is the fastest in-ditch pipeline integrity solution on the market. It enables measuring the depth of stress-corrosion cracking (SCC).

Body	High-resolution Sharck
Casing	Spring-loaded fingers
Coverage	74 mm (2.9 in)
Minimum channel requirement	64
Frequency	Tuned, fixed at 100 kHz
Encoder (20.53 counts/mm)	E: Ectane R: Reddy Q: QuickLink (Ignite)
Cable	5 m (16.4 ft)
Compatible pipe diameters (NPS)	254 mm (10 in) and more

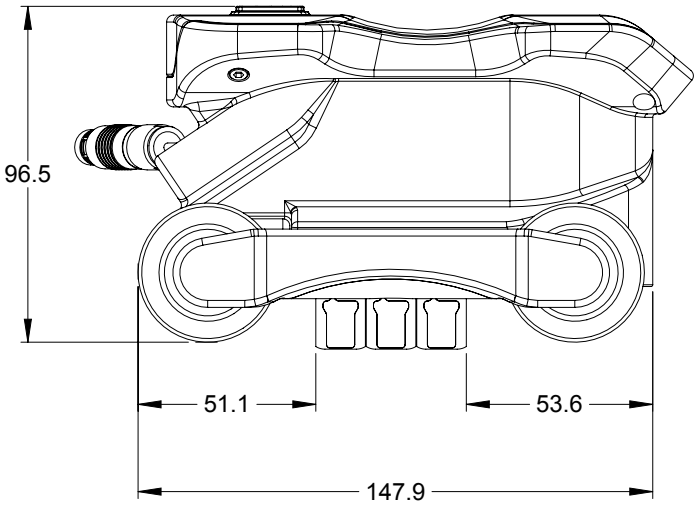

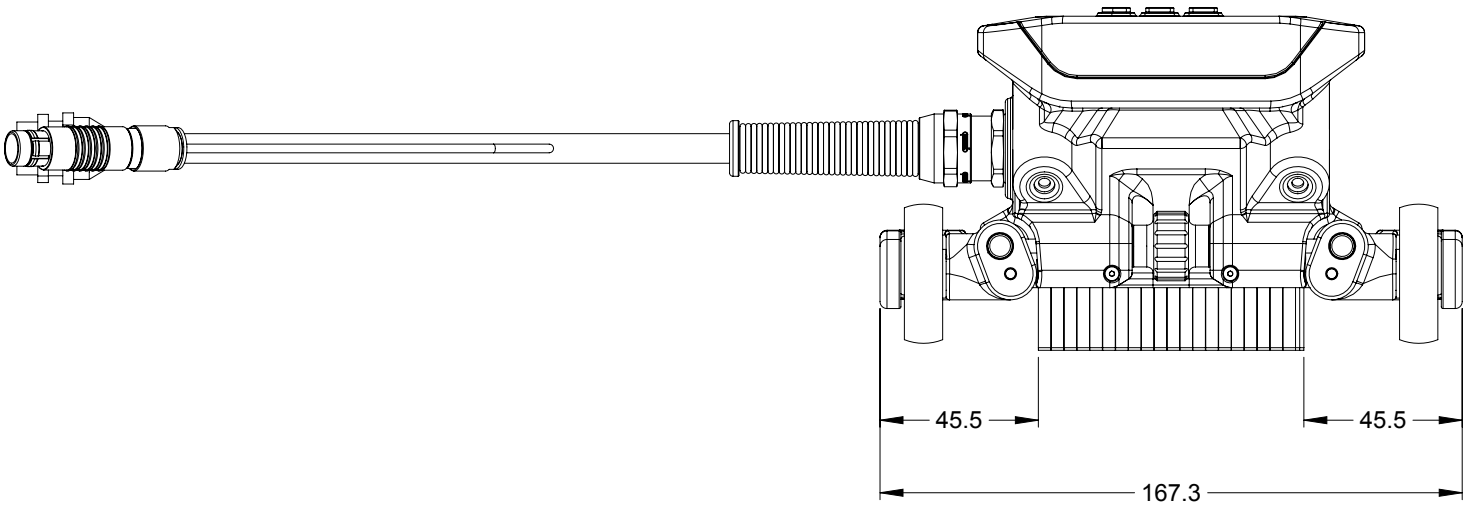

SHARCK-HR-6PLUS-033-N05R

The smaller version of the high-resolution Sharck probe, for the inspection of small pipes down to 152 mm (6 in) of diameter.

Body	High-resolution Sharck
Casing	Spring-loaded fingers
Coverage	41 mm (1.6 in)
Minimum channel requirement	64
Frequency	Tuned, fixed at 100 kHz
Encoder (20.53 counts/mm)	E: Ectane R: Reddy Q: QuickLink (Ignite)
Cable	5 m (16.4 ft)
Compatible pipe diameters (NPS)	152 mm (6 in) and more

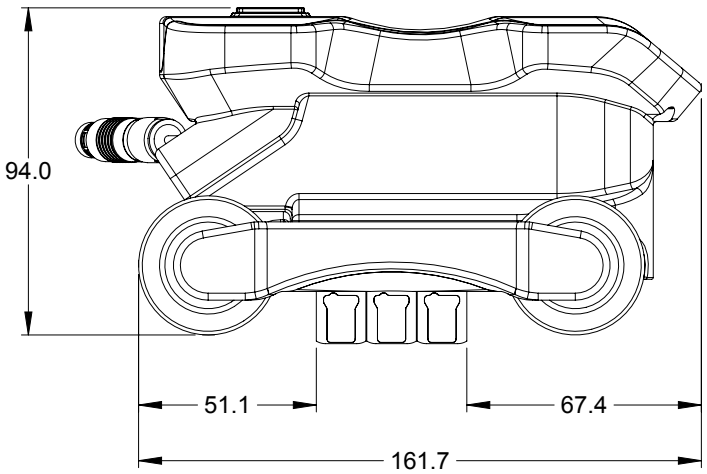

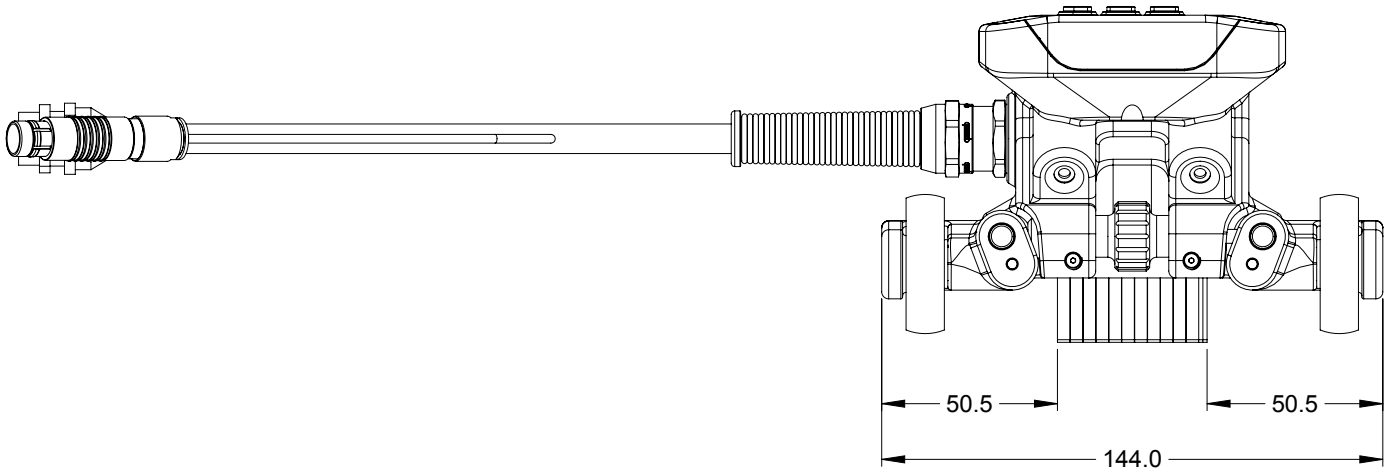

SHARCK-HR-PEN-ST-N05R or SHARCK-HR-PEN-ST-N05E

The single-element version of the high-resolution Sharck probe.

Body	High-resolution Sharck
Casing	Pencil straight
Frequency	Tuned, fixed at 100 kHz
Encoder (20.53 counts/mm)	E: Ectane R: Reddy
Cable	5 m (16.4 ft)

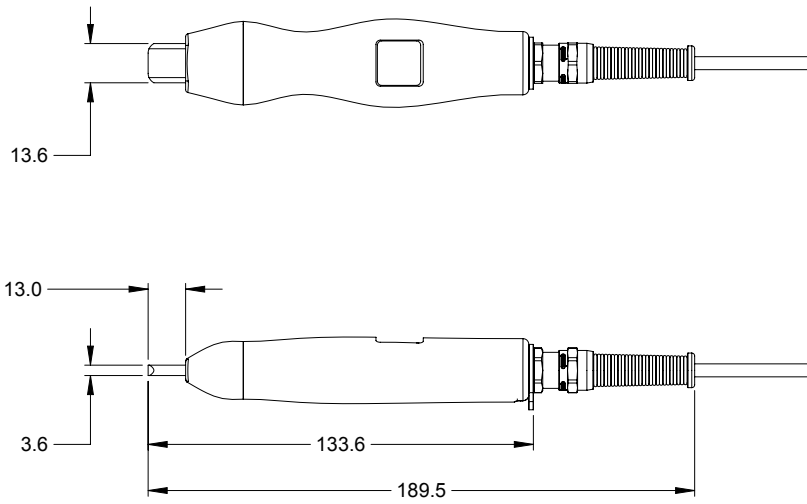

PERFORMANCE

SPECIFICATION	VALUE	NOTE
Detectable defect range (length × depth)	2 × 0.25 mm (0.08 × 0.01 in)	Results may vary according to crack location, liftoff, etc.
Maximum measurable crack depth	Typically 3 mm (0.120 in) with good accuracy	Can detect deeper cracks—system yields 3 mm+ (0.118 in+) results
Depth sizing accuracy	±10 %	The presence of corrosion may affect accuracy
Scan speed	Up to 600 mm/s (24 in/s)	With full data recording
Liftoff tolerance	Up to 1 mm (0.04 in)	Non-conductive coatings and paints, with monitoring and auto-correction
Materials	Pipeline carbon steel alloys	B, X42, X52, X60, X65, etc.

LARGE SURFACES – SPYNE PROBES

Spyne™, an adaptable surface Eddy Current Array (ECA) screening tool, is specifically engineered to maximize productivity for the detection of Stress Corrosion Cracking (SCC), cracks, subsurface defects, and pitting in various critical components such as high-pressure gas pipes, vessels, tanks, pipelines and more.

ECA-SPYNETOOL-6PLUS

Adjustable holder for the Spyne probes with embedded axial and circumferential encoders, allowing axial scanning on pipes from 150 mm (6 in) OD up to flat surfaces.

Body	Adjustable curvature, silicone wheels
Minimum pipe diameter	150 mm (6 in)
Detachable encoder (25.87 counts/mm)	Reddy connector
Cable	• N05R: 5 meters (16.4 ft) • N10R: 10 meters (32.8 ft) • N15R: 15 meters (49.2 ft)
Maximum surface temperature	150°C (300 °F)
Available accessories	Magnetic wheels: ECA-SPYNE-MAGWHEELS Spare axial encoder: ENC-SPYNE Spare circumferential encoder: ENC-SPYNE-CIRC Protective tapes: ECA-SPYNE-TAPE-025

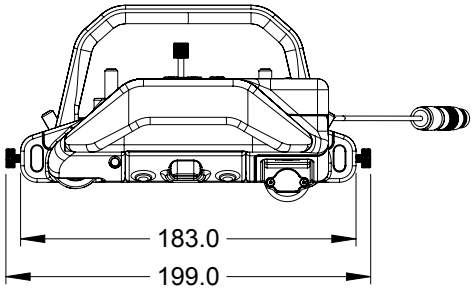

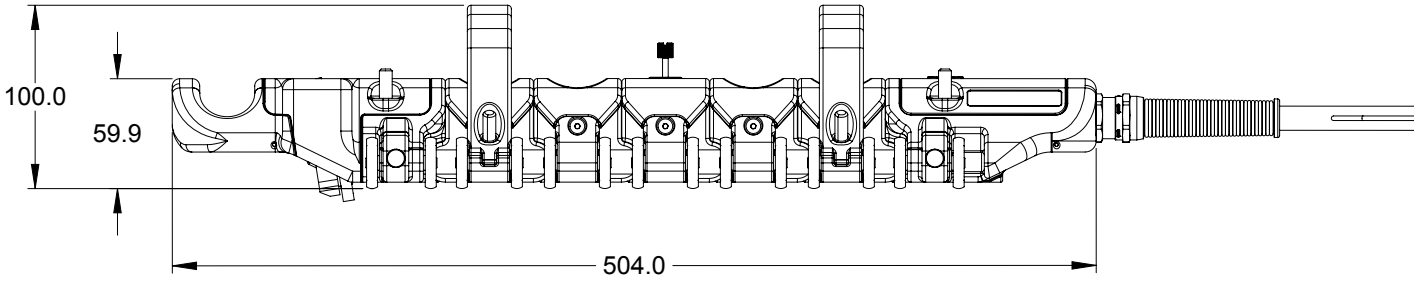

ECA-SPYNE-C-202-250-086

Flexible Spyne probe for the detection of surface-breaking cracks in carbon steel and other ferromagnetic materials.

Body	Spyne
Casing	Requires ECA-SPYNETOOL-6PLUS
Topology	Long single driver
Coverage	202 mm (8.0 in)
Central frequency	250 kHz
Frequency range	50-500 kHz
Coils	4.5 mm x 86 (0.177 in x 86)
Minimum channel requirement	128
Maximum surface temperature	150°C (300 °F)
Minimum detectable crack length	2 mm (0.08 in)

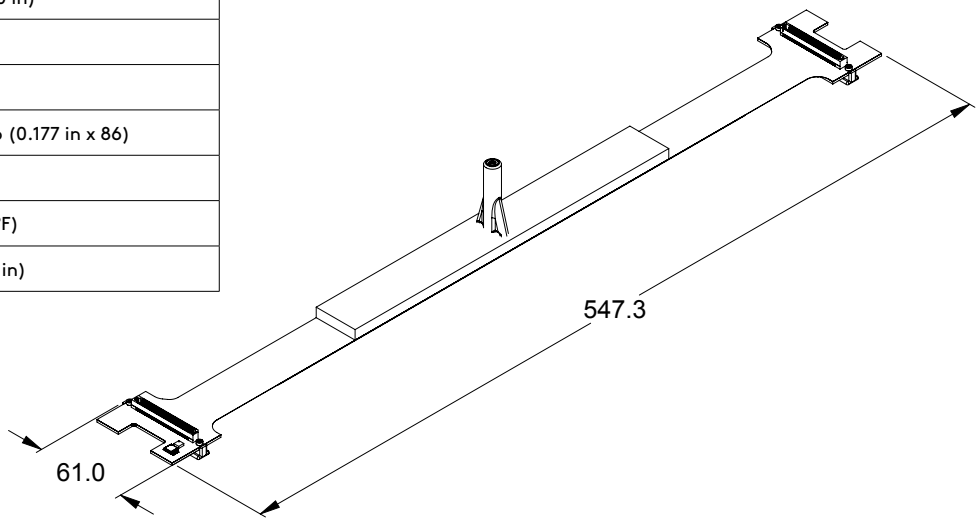

ECA-SPYNE-D-200-250-066

Flexible Spyne probe for the detection of surface-breaking cracks and defects in non-ferromagnetic materials.

Body	Spyne
Casing	Requires ECA-SPYNETOOL-6PLUS
Topology	Short double driver
Coverage	200 mm (7.9 in)
Central frequency	250 kHz
Frequency range	50-500 kHz
Coils	6.0 mm x 66 (0.236 in x 66)
Minimum channel requirement	128
Maximum surface temperature	150°C (300 °F)
Minimum detectable crack length	2 mm (0.08 in)

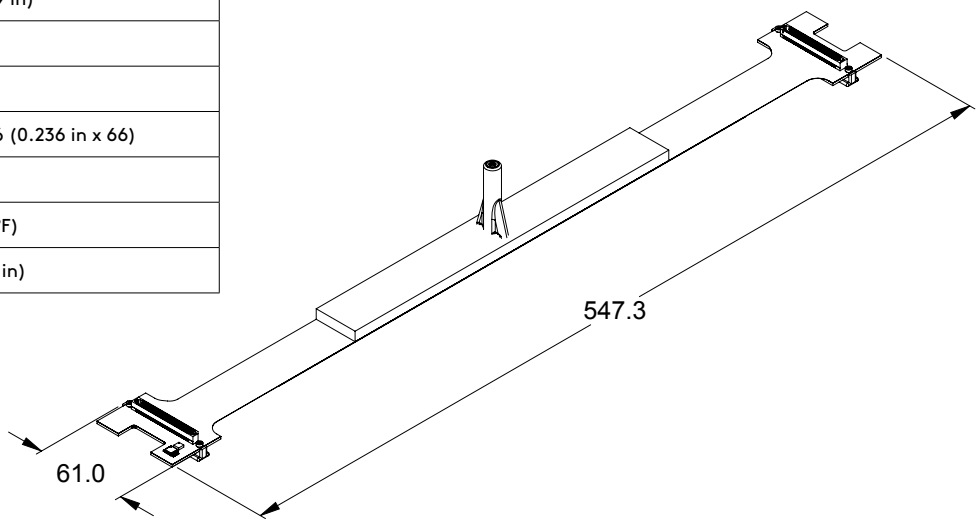

ECA-SPYNE-C-203-025-066

Flexible Spyne probe for the detection of subsurface and far-side defects in non-ferromagnetic materials.

Body	Spyne
Casing	Requires ECA-SPYNETOOL-6PLUS
Topology	Long single driver
Coverage	203 mm (8.0 in)
Central frequency	25 kHz
Frequency range	5-100 kHz
Coils	6.0 mm x 66 (0.236 in x 66)
Minimum channel requirement	128
Maximum surface temperature	150°C (300 °F)
Penetration (stainless steel / aluminum)	Up to 6 mm (0.236 in)

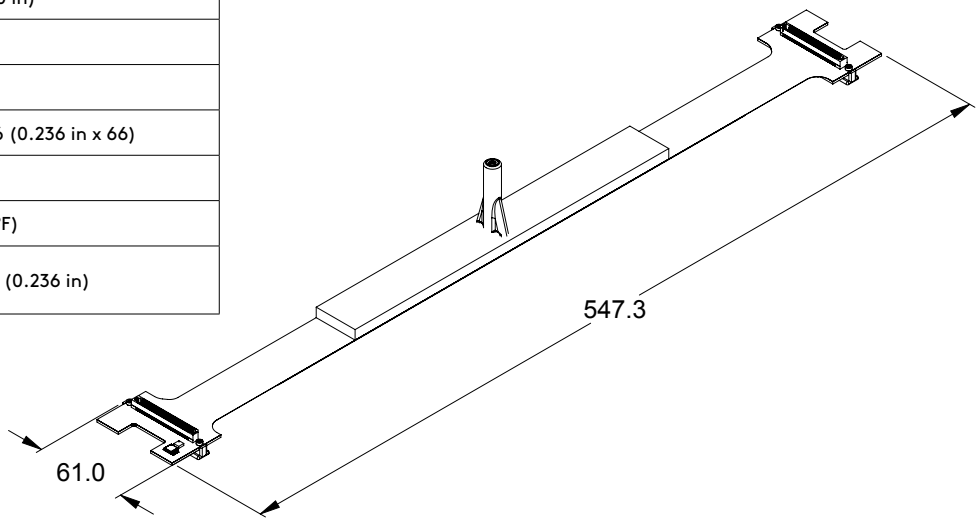

COMPLEX GEOMETRIES — FLEXIBLE PROBES

PRINTED FLEXIBLE PROBES (P-FLEX)

The P-Flex probes offer unparalleled customization capabilities for inspecting complex geometries, with superior coil performance and easy replaceability.

ECA-PFLEX-D-034-HF-032

The highest-resolution printed flexible probe is ideal for the detection of small surface-breaking defects.

Probe type	Coils printed on flexible circuit boards
Cable	ECA-PFLEX-CBL-D-032-N03S, detachable, purchased separately
Topology	Short double driver
Coverage	34 mm (1.34 in)
Central frequency	1500 kHz
Frequency range	1000 – 4000 kHz
Coil size	2.0 mm (0.08 in.)
Number of coils	32
Number of channels	64
Minimum bending radius	2 mm (0.08 in)
Minimum detectable crack length	0.5 mm (0.02 in)

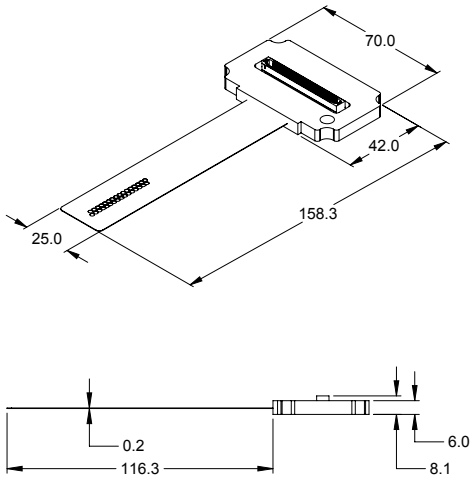

ECA-PFLEX-D-056-HF-032

The mid-range size of printed flexible probes offers good compromise between coil size and array coverage. Ideal for the detection of surface-breaking defects.

Probe type	Coils printed on flexible circuit boards
Cable	ECA-PFLEX-CBL-D-032-N03S, detachable, purchased separately
Topology	Short double driver
Coverage	56 mm (2.20 in)
Central frequency	1000 kHz
Frequency range	500 – 2000 kHz
Coil size	3.5 mm (0.14 in.)
Number of coils	32
Number of channels	64
Minimum bending radius	2 mm (0.08 in)
Minimum detectable crack length	1.0 mm (0.04 in)

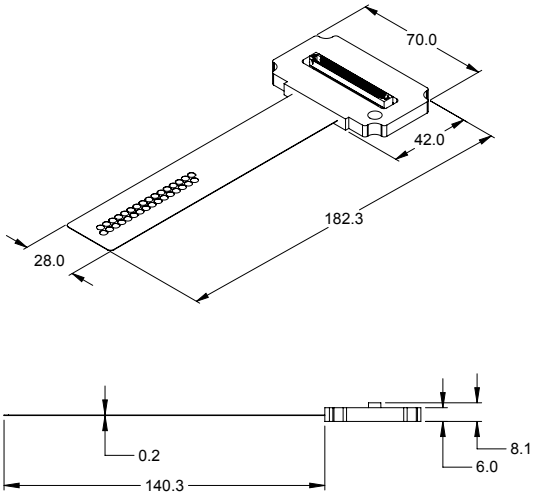

ECA-PFLEX-C-079-HF-032

The largest printed flexible probe is ideal for the detection of surface-breaking defects in ferromagnetic materials.

Probe type	Coils printed on flexible circuit boards
Cable	ECA-PFLEX-CBL-C-032-N03S detachable, purchased separately
Topology	Long single driver
Coverage	79 mm (3.11 in)
Central frequency	500 kHz
Frequency range	250 – 1500 kHz
Coil size	5.0 mm (0.20 in)
Number of coils	32
Number of channels	64
Minimum bending radius	2 mm (0.08 in)
Minimum detectable crack length	1.5 mm (0.06 in)

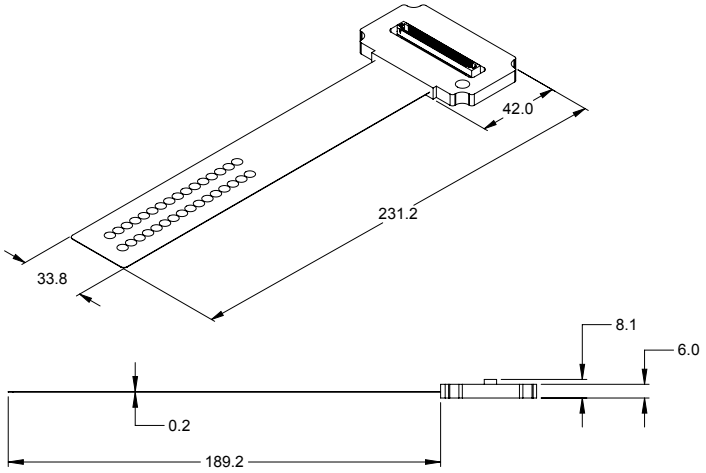

ECA-PFLEX-CBL-D-032-N03S or ECA-PFLEX-CBL-C-032-N03S

Cable adapter to be used with the P-Flex probes; includes removeable bracket for the standard encoder and several attachment points.

P-Flex probes compatibility	Small and medium: ECA-PFLEX-CBL-D-032-N03S Large: ECA-PFLEX-CBL-C-032-N03S
Cable length	3 m (9.8 ft)

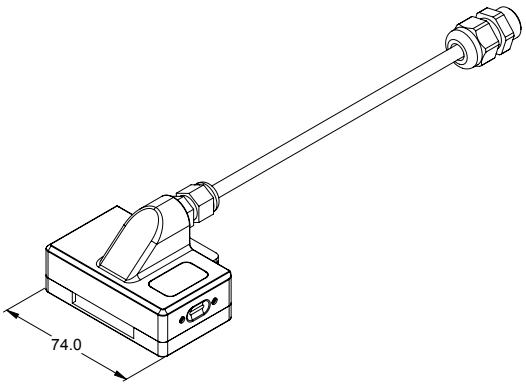

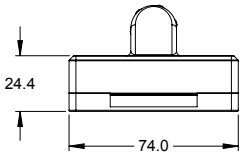



I-FLEX PROBES

The all-round most versatile, plug-and-play probes in the industry. I-Flex use traditional copper coils, allowing to operate at lower frequencies and to penetrate non-ferrous materials. I-Flex are designed for surfaces with a bend radius of 20 mm (0.787in) or more.

ECA-IFC-128-005-033-N03S

The extra-large I-Flex is specifically designed to detect far-surface corrosion and subsurface indications in non-ferromagnetic materials. The probe offers the largest possible coverage in corrosion-mapping applications.

Body	I-Flex
Casing	Extra-large
Topology	Long, single driver
Cable	3 m (9.8 ft)
Coverage	128 mm (5.04 in)
Central frequency	5 kHz
Frequency range	0.6–20 kHz
Coils (diameter × number)	6 mm × 33 (0.24 in × 33)
Channels (according to topology)	32
Minimum channel requirement	32
Penetration (stainless steel/aluminum)	Up to 6 mm (0.236 in)

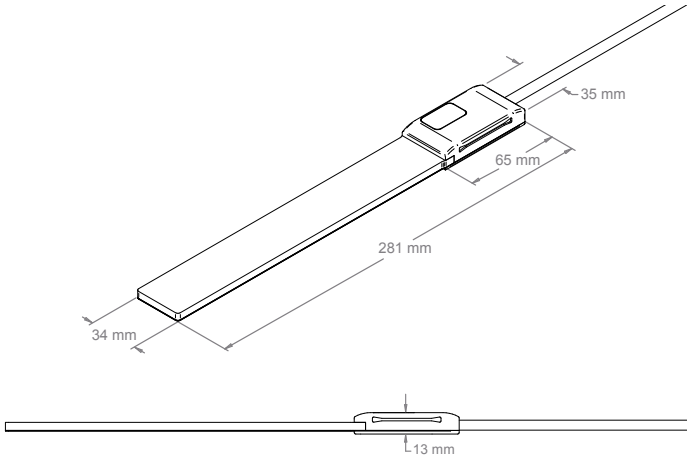

ECA-IFG-079-250-048-N03S

The large I-Flex is excellent for detecting subsurface indications and surface-breaking indications. The three, built-in, adaptorless topologies make the probe perfect for a broad range of challenging applications.

Body	I-Flex
Casing	Large
Topologies	Impedance Long, single driver Short, double driver
Cable	3 m (9.8 ft)
Coverage	79 mm (3.11 in)
Central frequency	250 kHz
Frequency range	50–525 kHz
Coils (diameter × number)	5 mm × 48 (0.20 in × 48)
Channels (according to topology)	32, 59, 60
Minimum channel requirement	32 or 64
Penetration (stainless steel/aluminum)	Up to 3 mm (0.118 in)
Minimum detectable crack length	1.5 mm (0.059 in)

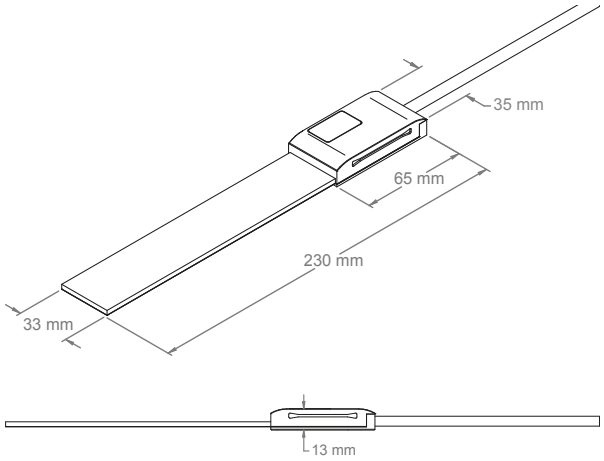

ECA-IFG-079-050-048-N03S

This large I-Flex benefits from its low frequency to reliably detect far-surface corrosion, subsurface indications, and surface-breaking indications. The three, built-in, adaptorless topologies make it perfect for a broad range of challenging applications.

Body	I-Flex
Casing	Large
Topologies	Impedance Long, single driver Short, double driver
Cable	3 m (9.8 ft)
Coverage	79 mm (3.11 in
Central frequency	50 kHz
Frequency range	10–150 kHz
Coils (diameter × number)	5 mm × 48 (0.20 in × 48)
Channels (according to topology)	32, 59, 60
Minimum channel requirement	32 or 64
Penetration (stainless steel/aluminum)	Up to 4 mm (0.158 in)

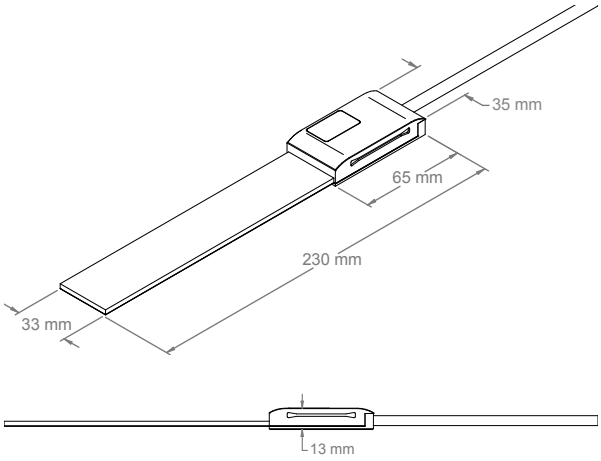

ECA-IFG-056-250-048-N03S

Excellent for detecting subsurface indications and surface-breaking indications. The three, built-in, adaptorless topologies make this probe perfect for a broad range of challenging applications.

Body	I-Flex
Casing	Medium
Topologies	Impedance Long, single driver Short, double driver
Cable	3 m (9.8 ft)
Coverage	56 mm (2.21 in)
Central frequency	250 kHz
Frequency range	50–525 kHz
Coils (diameter × number)	3.5 mm × 48 (0.14 in × 48)
Channels (according to topology)	32, 59, 60
Minimum channel requirement	32 or 64
Penetration (stainless steel/aluminum)	Up to 2 mm (0.079 in)
Minimum detectable crack length	1 mm (0.039 in)

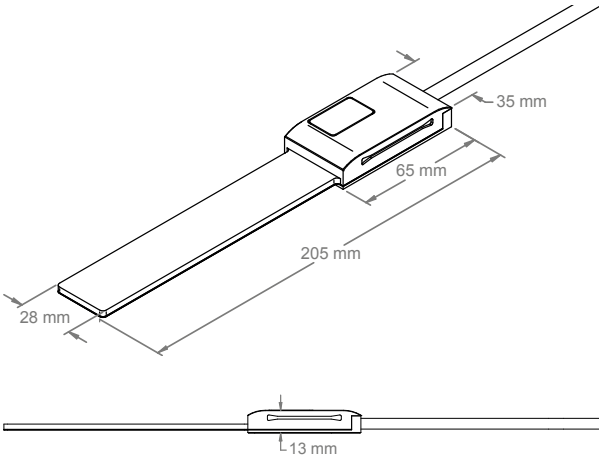

ECA-IFG-056-050-048-N03S

Excellent for detecting far-surface corrosion, subsurface indications, and surface-breaking indications. The three, built-in, adaptorless topologies make this probe perfect for a broad range of challenging applications.

Body	I-Flex
Casing	Medium
Topologies	Impedance Long, single driver Short, double driver
Cable	3 m (9.8 ft)
Coverage	56 mm (2.21 in)
Central frequency	50 kHz
Frequency range	10–150 kHz
Coils (diameter × number)	3.5 mm × 48 (0.14 in × 48)
Channels (according to topology)	32, 59, 60
Minimum channel requirement	32 or 64
Penetration (stainless steel/aluminum)	Up to 3 mm (0.118 in)

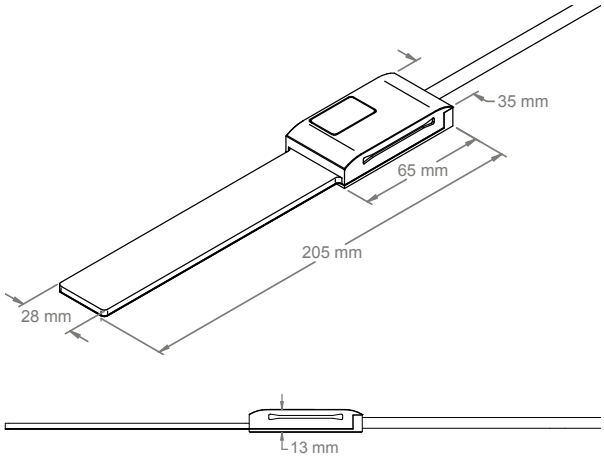

ECA-IFG-034-500-048-N03S

This super-high-resolution I-Flex is designed to detect very short, surface-breaking indications. The three, built-in, adaptorless topologies make this probe perfect for a broad range of challenging applications.

Body	I-Flex
Casing	Small
Topologies	Impedance Long, single driver Short, double driver
Cable	3 m (9.8 ft)
Coverage	34 mm (1.34 in)
Central frequency	500 kHz
Frequency range	100–800 kHz
Coils (diameter × number)	2 mm × 48 (0.08 in × 48)
Channels (according to topology)	32, 59, 60
Minimum channel requirement	32 or 64
Minimum detectable crack length	0.5 mm (0.020 in)

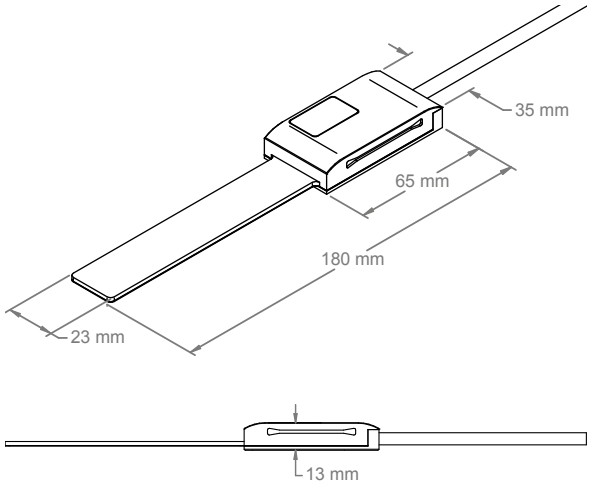

UNIVERSAL I-FLEX MANUAL PIPE SCANNER

ECA-AMPS-IF-042-170

Versatile scanner engineered to make it easier for operators to deploy Eddyfi I-Flex probes on tubes and pipes. It is the only scanner for I-Flex probes fitting tubes and pipes with outer diameters 42–170 mm (1.25–6.00 in NPS), depending on the probe model. Thanks to its low profile and light design, the scanner allows operators to replace several uncomfortable manual scans with one rapid axial scan, while maintaining a constant clock position. The scanner comes with a 18-pin (Ectane), 12-pin (Reddy), or 16-pin (Ignite) connector, and a 3 m (9.8 ft) cable

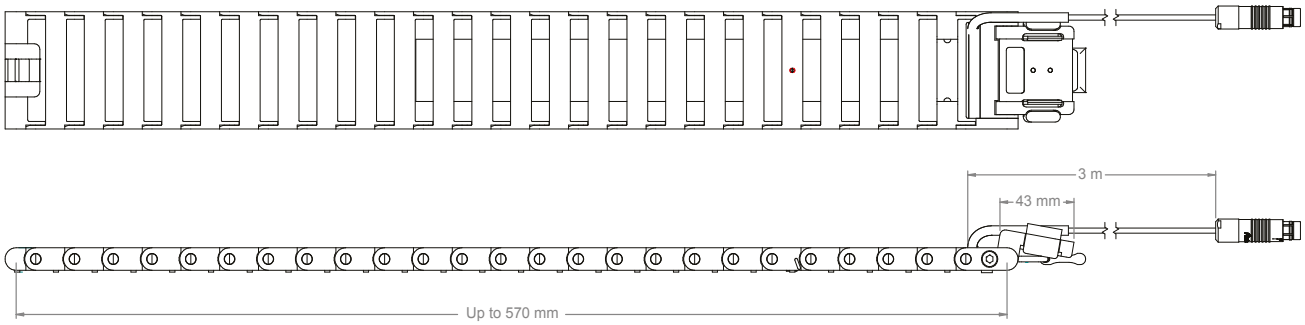

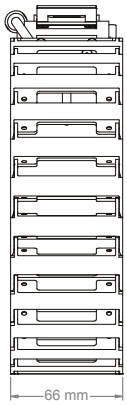

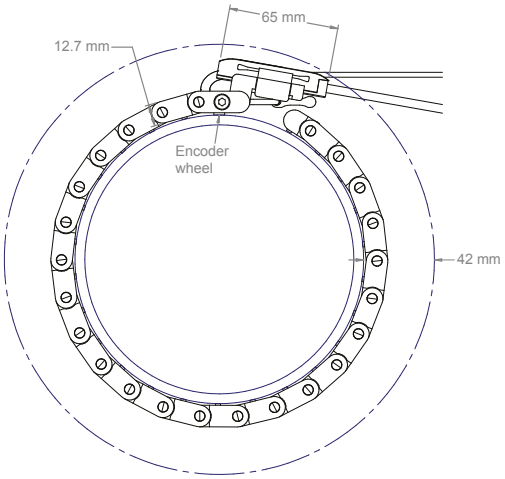

T-FLEX PROBES

Highly flexible, plug-and-play probes engineered with actual coils, yielding high-quality signals and better detection capabilities in a T configuration, which is better suited to some types of inspection. T-Flex probes are designed for surfaces with a bend radius of 20 mm (0.79 in) or more.

ECA-TFC-070-300-044-N03S

Designed to detect surface-breaking cracks and other surface defects on various smooth surfaces. Unleash the full potential of the probe by using transverse and axial channels (requires 128 channels), making it possible to detect defects in any orientations.

Body	T-Flex
Casing	Medium
Topology	Long, single driver
Cable	3 m (9.8 ft)
Coverage	70 mm (2.76 in)
Central frequency	300 kHz
Frequency range	100–600 kHz
Coils (diameter × number)	3 mm × 44 (0.12 in × 44)
Channels (according to topology)	63 (83 with all trans. ch.)
Minimum channel requirement	64
Minimum detectable crack length	1.5 mm (0.059 in)

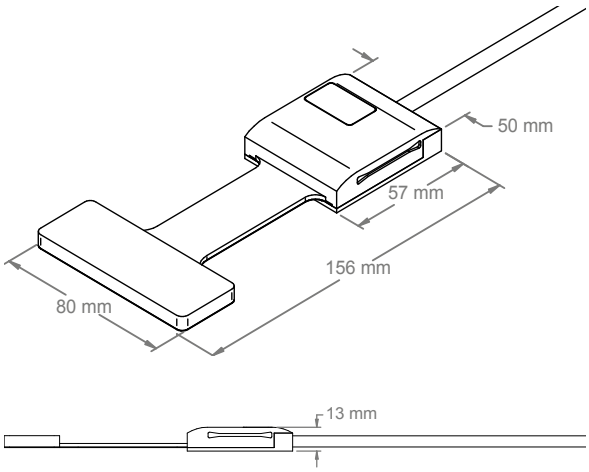

ECA-TFC-070-045-044-N03S

Low-frequency probe designed to detect some subsurface indications and surface-breaking cracks on various smooth surfaces. Unleash the full potential of the probe by using transverse and axial channels (requires 128 channels), making it possible to detect defects in any orientations.

Body	T-Flex
Casing	Medium
Topology	Long, single driver
Cable	3 m (9.8 ft)
Coverage	70 mm (2.76 in)
Central frequency	45 kHz
Frequency range	5–100 kHz
Coils (diameter × number)	3 mm × 44 (0.12 in × 44)
Channels (according to topology)	63 (83 with all trans. ch.)
Minimum channel requirement	64
Penetration (stainless steel/aluminum)	Up to 3 mm (0.118 in)
Minimum detectable crack length	1.5 mm (0.059 in)

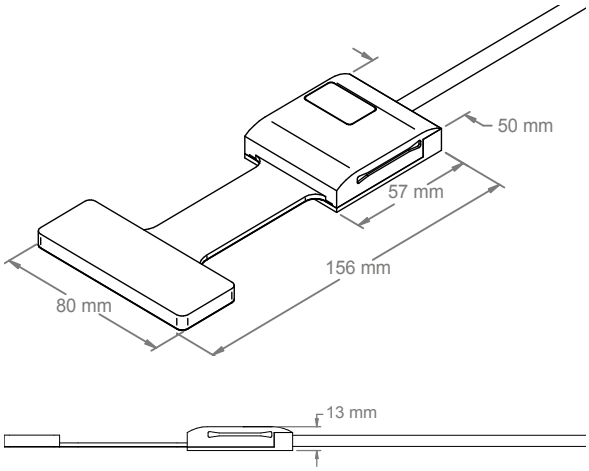

GEAR TEETH — GEAR PROBES

Over time, gear teeth are prone to surface cracking because of the constant torque they are submitted to. Surface-breaking cracks are typically found in the addendum, dedendum, and fillet of gear teeth, although they can also occur elsewhere.

GEAR-M30_42-112-N03T

Designed to inspect the cogs of large gears with a module ranging 30–42. The probe is engineered to detect short, surface-breaking cracks, and other surface defects in ferromagnetic materials with a high accuracy.

Body	Gear
Casing	Large
Topology	Long, single driver
Cable	3 m (9.8 ft)
Coverage	112 mm (4.4 in)
Central frequency	500 kHz
Frequency range	250 kHz–1 MHz
Coils (diameter × number)	4.5 mm × 48 (0.18 in × 48)
Channels	91
Minimum channel requirement	128
Minimum detectable crack length	5 mm (0.197 in)

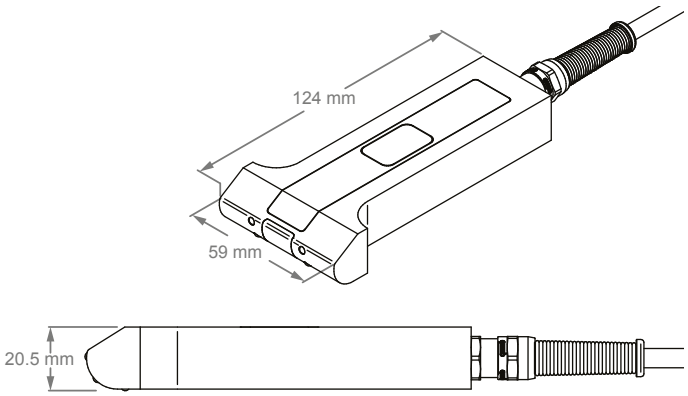

GEAR-M20_30-076-N03T

Designed to inspect the cogs of large gears with a module ranging 20–30. The probe is engineered to detect short, surface-breaking cracks, and other surface defects in ferromagnetic materials with a high accuracy.

Body	Gear
Casing	Medium
Topology	Long, single driver
Cable	3 m (9.8 ft)
Coverage	76 mm (3.0 in)
Central frequency	500 kHz
Frequency range	250 kHz–1 MHz
Coils (diameter × number)	4.5 mm × 33 (0.18 in × 33)
Channels	61
Minimum channel requirement	64
Minimum detectable crack length	5 mm (0.197 in)

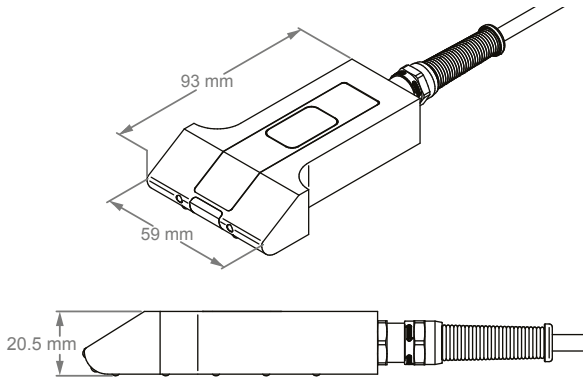

GEAR-M13_20-050-N03T

Designed to inspect the cogs of gears with a module ranging 13–20. The probe is engineered to detect short, surface-breaking cracks and other surface defects in ferromagnetic materials with a high accuracy.

Body	Gear
Casing	Small
Topology	Long, single driver
Cable	3 m (9.8 ft)
Coverage	50 mm (2.0 in)
Central frequency	500 kHz
Frequency range	250 kHz–1 MHz
Coils (diameter × number)	4.5 mm × 22 (0.18 in × 22)
Channels	48
Minimum channel requirement	64
Minimum detectable crack length	5 mm (0.197 in)

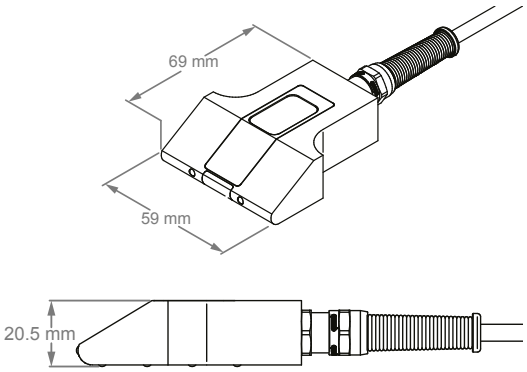



CURVED SURFACES — SEMI-FLEXIBLE PROBES

Designed for curved surfaces, such as pipes and pressure vessels. The sizes of casings determine the smallest diameter the probes can address, and is specific to each model. Semi-flexible probes are also suited to flat surfaces.

ECA-SFC-128-005-033-N03S

Specifically designed to detect far-surface corrosion and subsurface cracks in non-ferromagnetic materials, this probe offers the largest possible coverage in corrosion-mapping applications. It can be used on curved surfaces with an outside diameter of 0.91 m (36 in) or more.

Body	Semi-flexible
Casing	Large
Topology	Single driver
Cable	3 m (9.8 ft)
Coverage	128 mm (5.04 in)
Central frequency	5 kHz
Frequency range	0.6–20 kHz
Coils (diameter × number)	6 mm × 33 (0.24 in × 33)
Channels	32
Minimum channel requirement	32
Penetration (stainless steel/ aluminum)	Up to 6 mm (0.236 in)

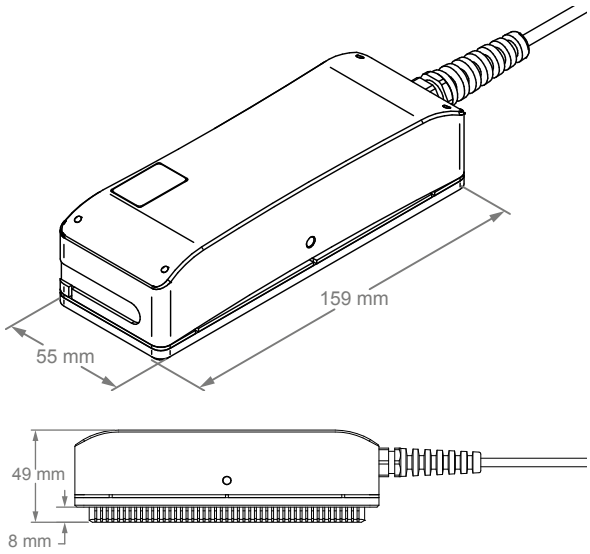

ECA-SFC-064-005-017-N03S

Specifically designed to detect far-surface corrosion and subsurface cracks in non-ferromagnetic materials, this probe offers half the coverage of ECA-SFC-128-005-033-N03S (above) in corrosion-mapping applications where access is limited. It can be used on curved surfaces with an outside diameter of 0.41 m (16 in) or more.

Body	Semi-flexible
Casing	Medium
Topology	Single driver
Cable	3 m (9.8 ft)
Coverage	64 mm (2.52 in)
Central frequency	5 kHz
Frequency range	0.6–20 kHz
Coils (diameter × number)	6 mm × 17 (0.24 in × 17)
Channels	16
Minimum channel requirement	32
Penetration (stainless steel/ aluminum)	Up to 6 mm (0.236 in)

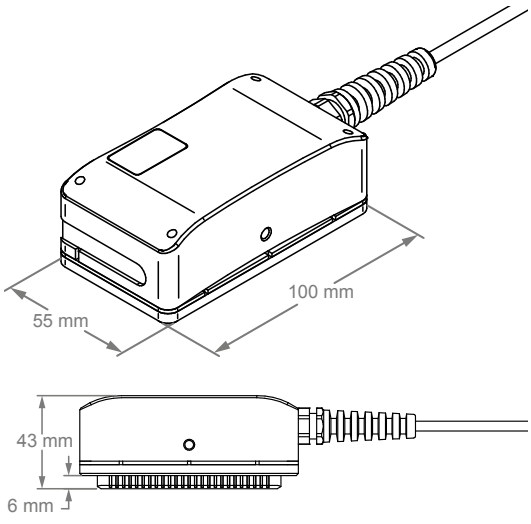

ECA-SFC-058-250-032-N03S

Designed to detect short, surface-breaking cracks and other surface defects in ferromagnetic materials with a high accuracy, the probe can be used on curved surfaces with an outside diameter of 0.41 m (16 in) or more.

Body	Semi-flexible
Casing	Medium
Topology	Long, single driver
Cable	3 m (9.8 ft)
Coverage	58 mm (2.28 in)
Central frequency	250 kHz
Frequency range	50–525 kHz
Coils (diameter × number)	3.5 mm × 32 (0.14 in × 32)
Channels	59
Minimum channel requirement	64
Minimum detectable crack length	1 mm (0.039 in)

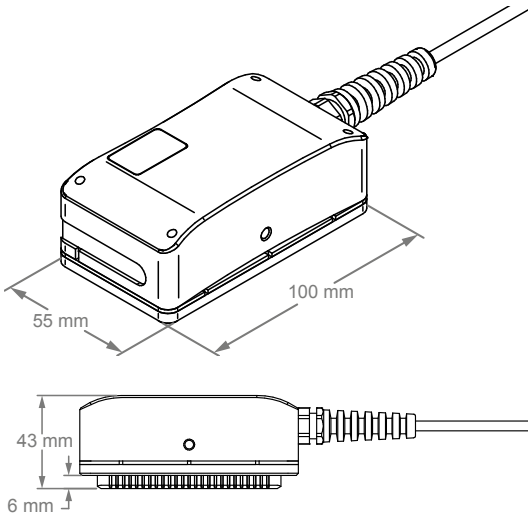

ECA-SFD-056-250-032-N03S

Designed to detect short, surface-breaking cracks and other surface defects in non-ferromagnetic materials with a high accuracy, the probe can be used on curved surfaces with an outside diameter of 0.41 m (16 in) or more.

Body	Semi-flexible
Casing	Medium
Topology	Short, double driver
Cable	3 m (9.8 ft)
Coverage	56 mm (2.21 in)
Central frequency	250 kHz
Frequency range	50–525 kHz
Coils (diameter × number)	3.5 mm × 32 (0.14 in × 32)
Channels	60
Minimum channel requirement	64
Minimum detectable crack length	1 mm (0.039 in)

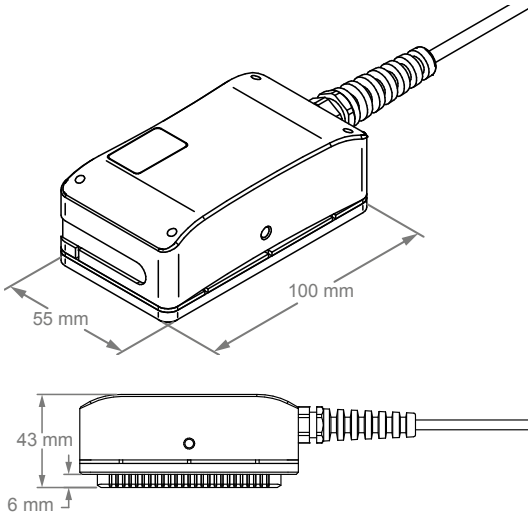

ECA-SFC-071-500-064-N03S

Super-high-resolution probe designed to detect very short, surface-breaking cracks in ferromagnetic materials. Note that you need 128 or 256 channels to use this probe. Consider ECA-SFC-035-500-032-N03S (page 21) as an alternative if you only have 64 available channels. The probe can be used on curved surfaces with an outside diameter of 0.41 m (16 in) or more.

Body	Semi-flexible
Casing	Large
Topology	Long, single driver
Cable	3 m (9.8 ft)
Coverage	71 mm (2.80 in)
Central frequency	500 kHz
Frequency range	100–800 kHz
Coils (diameter × number)	2 mm × 64 (0.08 in × 64)
Channels	123
Minimum channel requirement	128
Minimum detectable crack length	0.5 mm (0.020 in)

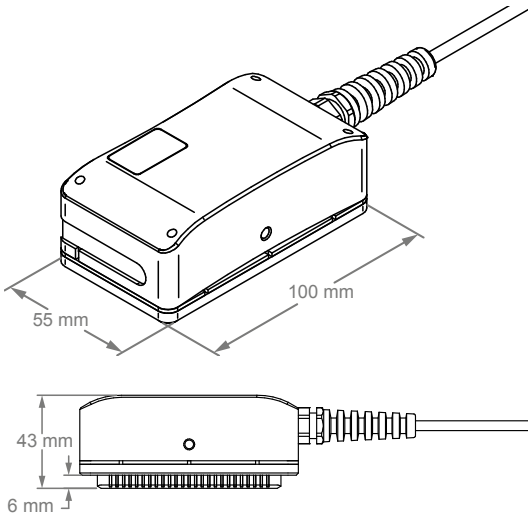

ECA-SFD-070-500-064-N03S

Super-high-resolution probe designed to detect very short, surface-breaking cracks in non-ferromagnetic materials. Note that you need 128 or 256 channels to use this probe. Consider ECA-SFD-034-500-032-N03S (page 21) as an alternative if you only have 64 available channels. The probe can be used on curved surfaces with an outside diameter of 0.41 m (16 in) or more.

Body	Semi-flexible
Casing	Medium
Topology	Short, double driver
Cable	3 m (9.8 ft)
Coverage	70 mm (2.76 in)
Central frequency	500 kHz
Frequency range	100–800 kHz
Coils (diameter × number)	2 mm × 64 (0.08 in × 64)
Channels	124
Minimum channel requirement	128
Minimum detectable crack length	0.5 mm (0.020 in)

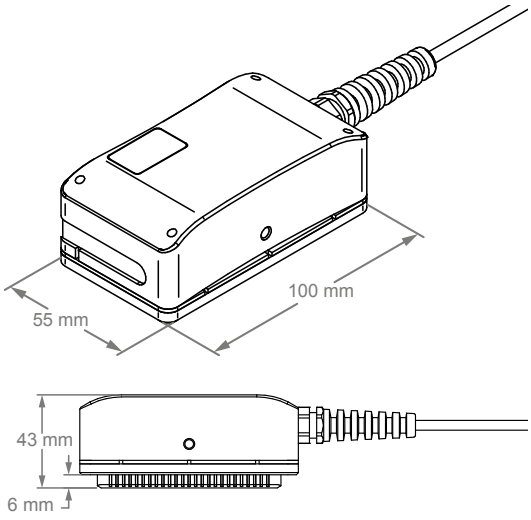

ECA-SFC-035-500-032-N03S

Super-high-resolution probe designed to detect very short, surface-breaking cracks in ferromagnetic materials. The probe offers approximately half the coverage of ECA-SFC-058-250-032-N03S (page 19), but only requires 64 channels. It can be used on curved surfaces with an outside diameter of 0.2 m (8 in) or more.

Body	Semi-flexible
Casing	Small
Topology	Long, single driver
Cable	3 m (9.8 ft)
Coverage	26 mm (1.02 in)
Central frequency	250 kHz
Frequency range	50–525 kHz
Coils (diameter × number)	3.5 mm × 16 (0.14 in × 16)
Channels	26
Minimum channel requirement	32
Penetration (stainless steel/ aluminum)	Up to 3 mm (0.118 in)
Minimum detectable crack length	1 mm (0.039 in)

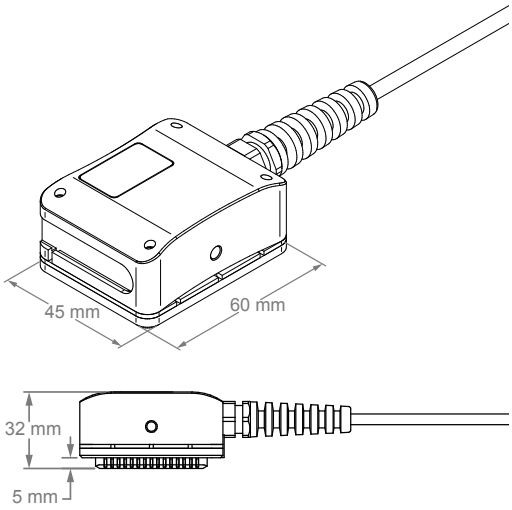

ECA-SFD-034-500-032-N03S

Super-high-resolution probe designed to detect very short, surface-breaking cracks, in non-ferromagnetic materials. The probe offers approximately half the coverage of the ECA-SFD-056-250-032-N03S (page 19), but only requires 64 channels. It can be used on curved surfaces with an outside diameter of 0.2 m (8 in) or more.

Body	Semi-flexible
Casing	Small
Topology	Short, double driver
Cable	3 m (9.8 ft)
Coverage	34 mm (1.34 in)
Central frequency	500 kHz
Frequency range	100–800 kHz
Coils (diameter × number)	2 mm × 32 (0.08 in × 32)
Channels	60
Minimum channel requirement	64
Minimum detectable crack length	0.5 mm (0.020 in)

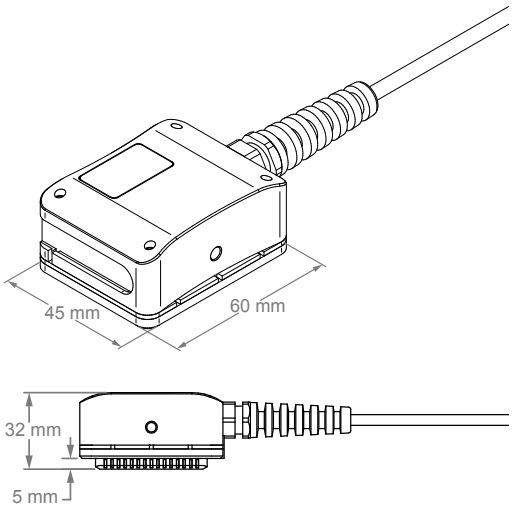

WELDS AND SMOOTH SURFACES — PADDED PROBES

Designed to detect welding defects in non-ferromagnetic materials, their padded membrane is extremely resistant to the harsh friction encountered in such applications, reducing weld preparation requirements to a minimum.

ECA-PDC-058-250-032-N03S

Designed to detect short, surface-breaking cracks and other surface defects in ferromagnetic materials, the probe's unique design enables it to adapt to weld crowns 5 mm (0.2 in) or less.

Body	Padded
Casing	Medium
Topology	Long, single driver
Cable	3 m (9.8 ft)
Coverage	58 mm (2.28 in)
Central frequency	250 kHz
Frequency range	50–525 kHz
Coils (diameter × number)	3.5 mm × 32 (0.14 in × 32)
Channels	59
Minimum channel requirement	64
Minimum detectable crack length	1 mm (0.039 in)

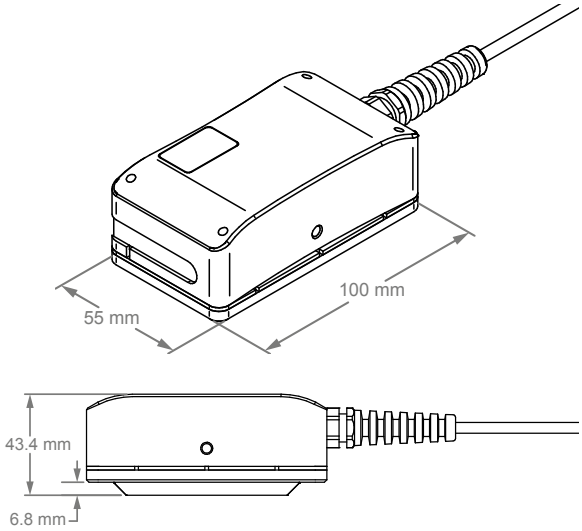

ECA-PDD-056-250-032-N03S

Designed to detect short, surface-breaking cracks and other surface defects in non-ferromagnetic materials, the probe's unique design enables it to adapt to weld crowns 5 mm (0.2 in) or less.

Body	Padded
Casing	Medium
Topology	Short, double driver
Cable	3 m (9.8 ft)
Coverage	56 mm (2.21 in)
Central frequency	250 kHz
Frequency range	50–525 kHz
Coils (diameter × number)	3.5 mm × 32 (0.14 in × 32)
Channels	60
Minimum channel requirement	64
Minimum detectable crack length	1 mm (0.039 in)

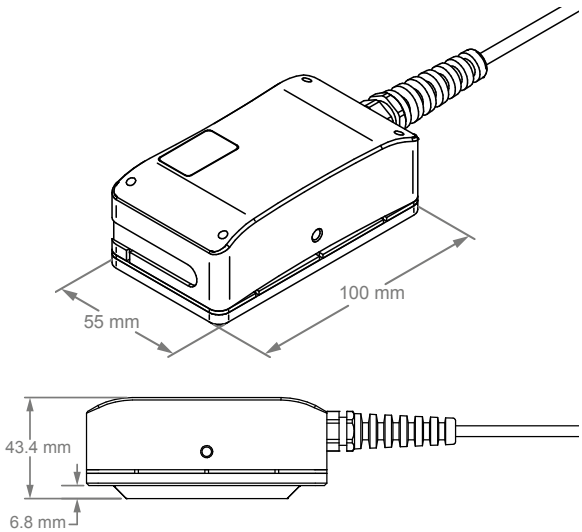

ECA-PDC-055-500-050-N03S

Super-high-resolution probe designed to detect very short, surface-breaking cracks in ferromagnetic materials. Note that you need 128, or 256 channels to use this probe. Consider ECA-PDC-035-500-032-N03S (page 24) as an alternative if you only have 64 available channels. The probe can adapt to weld crowns 5 mm (0.2 in) or less.

Body	Padded
Casing	Medium
Topology	Long, single driver
Cable	3 m (9.8 ft)
Coverage	55 mm (2.17 in)
Central frequency	500 kHz
Frequency range	100–800 kHz
Coils (diameter × number)	2 mm × 50 (0.08 in × 50)
Channels	95
Minimum channel requirement	128
Minimum detectable crack length	0.5 mm (0.020 in)

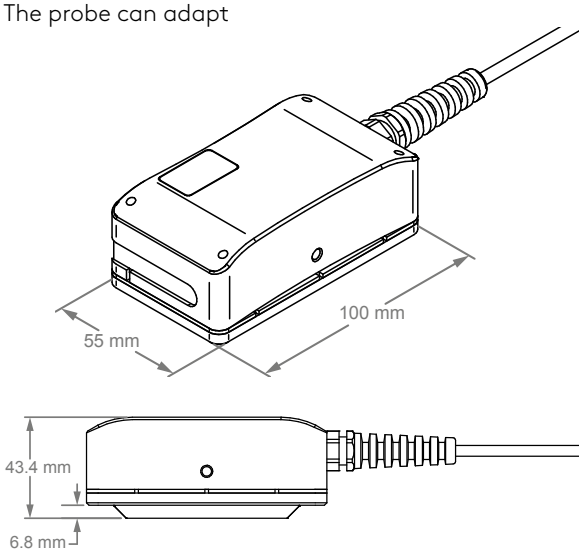

ECA-PDD-054-500-050-N03S

Super-high-resolution probe designed to detect very short, surface-breaking cracks in non-ferromagnetic materials. Note that you need 128, or 256 channels to use this probe. Consider ECA-PDD-034-500-032-N03S (page 24) as an alternative if you only have 64 available channels. The probe can adapt to weld crowns 5 mm (0.2 in) or less.

Body	Padded
Casing	Medium
Topology	Short, double driver
Cable	3 m (9.8 ft)
Coverage	54 mm (2.13 in)
Central frequency	500 kHz
Frequency range	100–800 kHz
Coils (diameter × number)	2 mm × 50 (0.08 in × 50)
Channels	96
Minimum channel requirement	128
Minimum detectable crack length	0.5 mm (0.020 in)

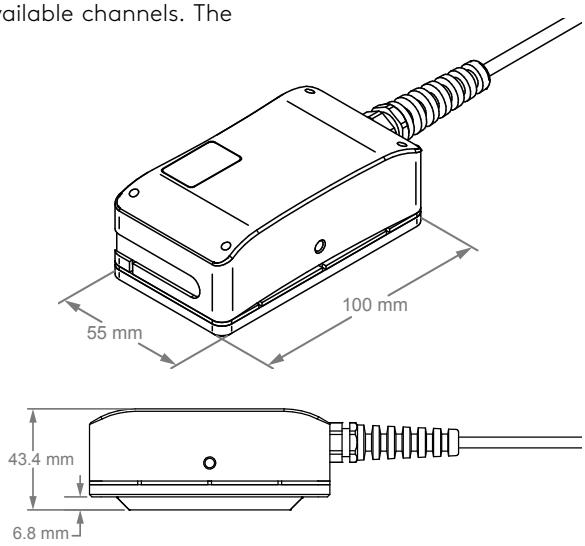

ECA-PDC-035-500-032-N03S

Super-high-resolution probe designed to detect very short, surface-breaking cracks and other surface defects in ferromagnetic materials. Its unique design enables it to adapt to weld crowns 5 m (0.2 in) or less.

Body	Padded
Casing	Small
Topology	Long, single driver
Cable	3 m (9.8 ft)
Coverage	34 mm (1.34 in)
Central frequency	500 kHz
Frequency range	100–800 kHz
Coils (diameter × number)	2 mm × 32 (0.08 in × 32)
Channels	59
Minimum channel requirement	64
Minimum detectable crack length	0.5 mm (0.020 in)

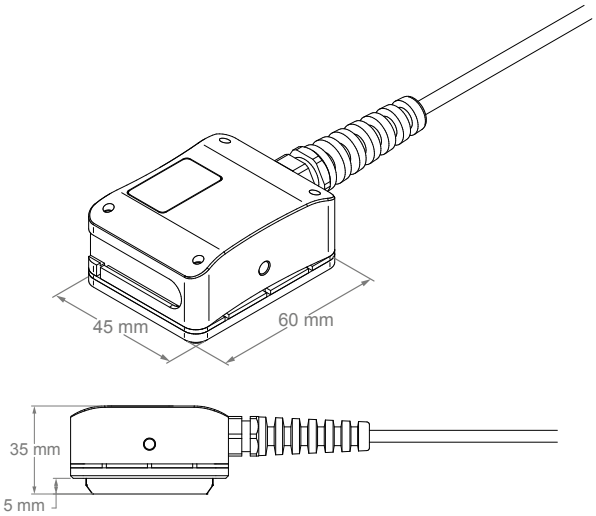

ECA-PDD-034-500-032-N03S

Super-high-resolution probe designed to detect very short, surface-breaking cracks and other surface defects in welds featuring weld crowns 5 mm (0.2 in) or less.

Body	Padded
Casing	Small
Topology	Short, double driver
Cable	3 m (9.8 ft)
Coverage	34 mm (1.34 in)
Central frequency	500 kHz
Frequency range	100–800 kHz
Coils (diameter × number)	2 mm × 32 (0.08 in × 32)
Channels	60
Minimum channel requirement	64
Minimum detectable crack length	0.5 mm (0.020 in)

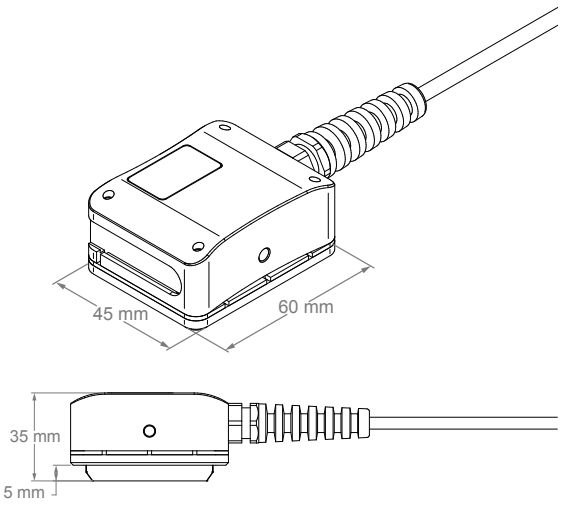

CUSTOM ECA PROBES

At Eddyfi Technologies, we make the impossible possible. We have the expertise, the engineers, and the manufacturing capabilities to take almost any set of custom surface-inspection requirements — from dimensions, coil row number, to topologies — and turn them into practical solutions. We have had the opportunity to demonstrate this by developing:

- Static probes
- Clamping probes
- Encircling probes
- Spring-loaded probes
- Custom-geometry probes
- Gel-filled probes
- Individually spring-loaded elements
- Expandable probes
- Partial saturation probes







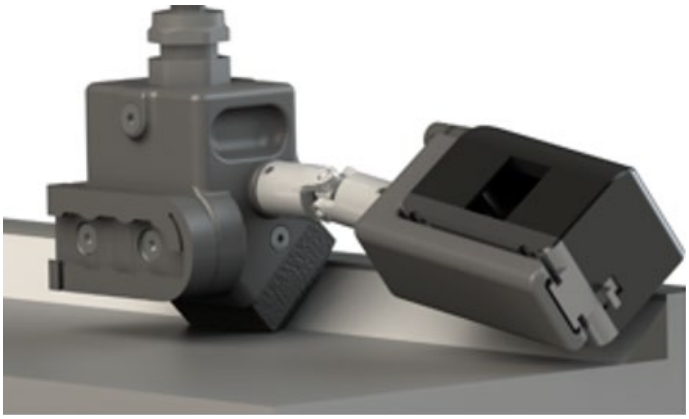

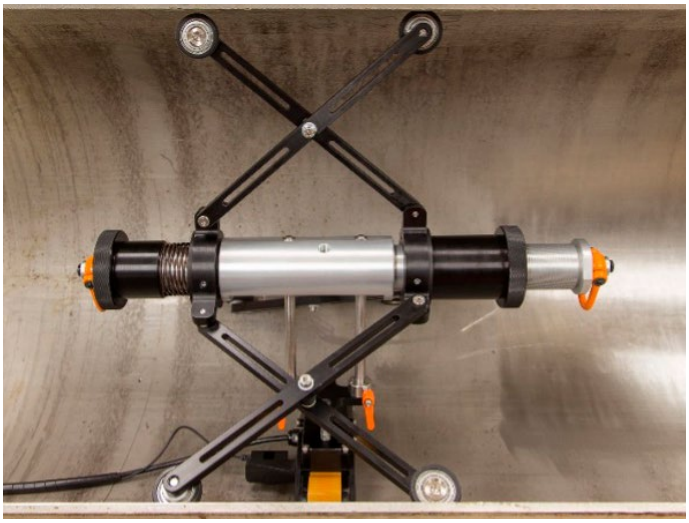



TURBINE APPLICATIONS

Gas turbines are critical assets in the power generation industry. They are large and complex, and shutting them down is often quite costly. Turbine blades, generator slots, rotor bores, bore holes, and dovetails must all be inspected regularly, quickly, and efficiently and each have very specific mechanical designs. They also tend to have unique geometries, depending on the manufacturer, that make it hard to inspect with conventional methods. These applications involve developing custom probes to fulfill each highly specific set of requirements. Over the years, Eddyfi Technologies gained a wealth of concrete experience developing ECA probes for these applications. By coming to us with your turbine application requirements, you're not starting from scratch. Rather, you have a great head start.

TURBINE BLADES

Several blades are equipped with cooling holes and gas paths, which are the source of several types of problems, such as subsurface defects and corrosion. Turbine blades also usually have very specific profiles and are sometimes coated. This presents a number of challenges for which we developed flexible ECA probes, trailing-edge probes, and many more.

GENERATOR SLOTS

In power generators, current flows through enormous stator bars running in wedged slots along the axis. Once generators have been operating for a long time, electromagnetic forces may cause the stator bars to vibrate because of loose slot wedges. This can generate fretting and cracking, so it is necessary to inspect slot wedges regularly. They require profiled ECA probes, which we designed for several customers.

ROTOR BORES

Many steam turbine rotors are bored to allow several shafts to be built into one another, making multiple rotation speeds possible. These bores need to be inspected for cracking, which can be difficult and time-consuming because of the length and diameter of the rotors. Eddyfi Technologies developed a system used by many in the industry to inspect bores with a combination of ECA and UT.



BORE HOLES



Rotor bores are also engineered with holes, where surface-breaking cracks can develop, creating the need to be detected. Eddyfi Technologies developed several probes to do this job.

DOVETAILS

Turbine blades are generally attached to rotors through an ingenious system of male and female “dovetails” that must be inspected for defects to ensure safety and maximize the life of equipment. Dovetail inspection demands probes that are shaped to specific dovetail profiles; designed to specifically target “hot spots” or entire dovetail profiles; capable of fast single-pass scans of regions of interest; and easy to handle — all things that Eddyfi Technologies excels at designing.



CALIBRATION STANDARDS

These reference plates are used to calibrate your probe for given applications.

APPLICATION	MATERIAL	THICKNESS	INDICATIONS	PART NUMBER
Corrosion	Grade 6061 aluminum	6.35 mm (0.250 in)	13 × FBH, Ø1.6-12.7 mm (0.063-0.500 in)	REFPL-A6061-0635-STDCOR01
Welds	Grade 316 stainless steel	6.35 mm (0.250 in)	1 × long EDM notch 9 × short EDM notch 3 × FBH, Ø1.5 mm (0.059 in)	REFPL-SS316-0635-STDWLD01
Surface-breaking and subsurface defects	Grade 6061 aluminum	3.18 mm (0.125 in)	3 × long EDM notch 3 × FBH, Ø3 mm (0.118 in)	REFPL-A6061-0318-STDCAL01
	Grade 316 stainless steel	3.18 mm (0.125 in)	3 × long EDM notch 3 × FBH, Ø3 mm (0.118 in)	REFPL-SS316-0318-STDCAL01
	Grade 1018 carbon steel	3.18 mm (0.125 in)	3 × long EDM notch 3 × FBH, Ø3 mm (0.118 in)	REFPL-C1018-0318-STDCAL02
	Grade 6061 aluminum	3.18 mm (0.125 in)	1 × long EDM notch 9 × short EDM notch 1 × FBH, Ø3 mm (0.118 in) 1 × FBH, Ø1.5 mm (0.059 in) 1 × FBH, Ø0.75 mm (0.030 in)	REFPL-A6061-0318-STDCAL03
	Grade 316 stainless steel	3.18 mm (0.125 in)	1 × long EDM notch 9 × short EDM notch 1 × FBH, Ø3 mm (0.118 in) 1 × FBH, Ø1.5 mm (0.059 in) 1 × FBH, Ø0.75 mm (0.030 in)	REFPL-SS316-0318-STDCAL03
	Grade 1018 carbon steel	3.18 mm (0.125 in)	1 × long EDM notch 9 × short EDM notch 1 × FBH, Ø3 mm (0.118 in) 1 × FBH, Ø1.5 mm (0.059 in) 1 × FBH, Ø0.75 mm (0.030 in)	REFPL-C1018-0318-STDCAL03
Sharck-BW	Grade 1018 carbon steel	9.5 mm (0.375 in)	3 × fatigue cracks	REFPL-C1018-BW
Sharck-FW		6.35 mm (0.25 in)	4 × short EDM notches	REFPL-C1018-FW
Sharck-HR	Grade X52 carbon steel	9.5 mm (0.375 in)	11 × short EDM notches	REFPL-X52-HR
Gear	Grade 1018 carbon steel	Gear module 13 to 20	1 × long notch, 3 × short EDM notches	CALBLOCK-GEAR-M13_20
		Gear module 20 to 30		CALBLOCK-GEAR-M20_30
		Gear module 30 to 42		CALBLOCK-GEAR-M30_42

ENCODER

ENC-STD-2

High-precision, high-resolution (25.46 counts/mm) encoder for standard surface probes, regardless of their size and type. Rugged aluminum casing, waterproof design, and easy to clean with a replaceable wheel. The click-on design of the encoder also makes it extremely simple to install without any tools.



- Rugged aluminum casing
- Waterproof
- Easy to clean
- User-replaceable wheel

Three Models:

- 18P: Ectane
- 12P: Reddy
- 16P: Ignite

The information in this document is accurate as of its publication. Actual products may differ from those presented herein.

©2026 Eddyfi Canada Inc. Eddyfi, DefHi, Ectane, Magnifi, a nd their associated logos are trademarks or registered trademarks of Eddyfi Canada, Inc. in Canada and/other countries. Eddyfi Technologies reserves the right to change product offerings and specifications without notice.

2026-07

www.eddyfi.com info@eddyfi.com

Eddyfi Technologies